VoIP Telephony Solutions for the Office

Opening up a new world of IP applications

The business of VoIP in the home and office

Overview

DSP Group™'s VoIP solutions for the office provide small, medium and large businesses with the benefits of low-cost VoIP terminals featuring exceptional voice clarity and acoustical performance, as well as easy expandability to cordless telephony.

The Company's scalable VoIP solutions help manufacturers build a range of enhanced low-to-high-end VoIP products for the office at minimal cost. These products include corded desktop and cordless IP phones, multi-line and multi-handset phones with an integrated mini-PBX, and stationary DECT key phones.

Features

- Highly-integrated digital and analog IC solution for system bill of materials (BOM) cost savings and compact design
- Enhanced acoustic echo canceller (EAEC) enabling high-quality, full-duplex hands-free speakerphone
- SIP stack and SIP application (RadVision or others)
- G.729a, G.723.1, G.711, G.711.1 WB, iLBC, G.722, G.722.2 (WB-AMR), G.726 vocoders
- Simultaneous WB/NB VoIP call support (up to 6 calls)
- Full telephony functions including line hold, call transfer, call forward, call waiting, call screening, call conferencing (internal and external), dial plans, call routing, DTMF, optional PSTN line (FXO) with DTAM, CID, CLIP
- Integrated Skype engine
- Superb voice quality including echo cancellation, comfort noise generation (CNG), voice activity detection (VAD), packet loss concealment (PLC), automatic gain control (AGC), and adaptive jitter buffer
- Superior voice clarity with DSP Group's CleaRtalk™ technology suite for noise reduction and voice enhancement
- Security functions including AES engine, SRTP and optional trusted platform module (TPM) integration
- IP protocol support including IP/TCP/UDP/ICMP/ARP/RARP, DHCP client, PPPoE, TFTP, HTTP, SNTP & DNS & FTP, SSH
- RTP and RTCP application
- Various ptimes (up to 90ms) and on-the-fly codec change support
- QoS (IEEE 802.1P, IEEE 802.1Q & ToS field)
- Configuration including Web-based GUI, menu on the device, and auto provisioning system (HTTP/TFTP)
- Software upgradability
- Low power consumption to meet PoE requirements and EU regulations

Seamless DECT Extension

- Integrated RF IC including advanced DECT transceiver, PA, and high-performance LNA with superior sensitivity
- Worldwide DECT standard support
- CAT-iq and GAP compliance
- Multi-handset (up to 10 active) support with multi-line PBX features
- Superior range and coverage with DSP Group's CleaRange™ technology suite
- Software upgradability over the air (SUOTA using CAT-iq 3.0)
- Eco-friendly system: zero radiation mode when idle, low power consumption

Benefits

- Scalable solution based on high-performance standard processors (ARM9™ running Linux OS and high-performance DSP)
- Full set of hardware and software reference designs, SDKs and single-source applications enabling short development cycle
- Very low memory foot print (4MB) for basic IP phone application
- DSP Group-advanced technologies for improved voice coverage and high data rate over DECT
- Full-range coverage of PSTN and VoIP product categories including cordless/corded IP phones, VoIP gateways and ATAs using the same HW/SW architectures
- Focus on CAT-iq cordless connectivity, power reduction, audio quality enhancement, and system cost optimization
- Complementary DSP Group offering including XpandR™-based high-end IP phone with video and low-to-high-end handset designs with data applications

Applications

- Corded desktop IP phone
- Cordless IP phone with DECT handset and/or headset
- Multi-line/multi-handset IP phone with integrated mini-PBX
- Stationary DECT key phone
- IP-PBX DECT extension
- Embedded Skype

DSP GROUP
at home in your wireless world

VoIP Telephony Solutions for the Office

Opening up a new world of IP applications

The business of VoIP in the home and office

Low-Cost IP Phone Block Diagram

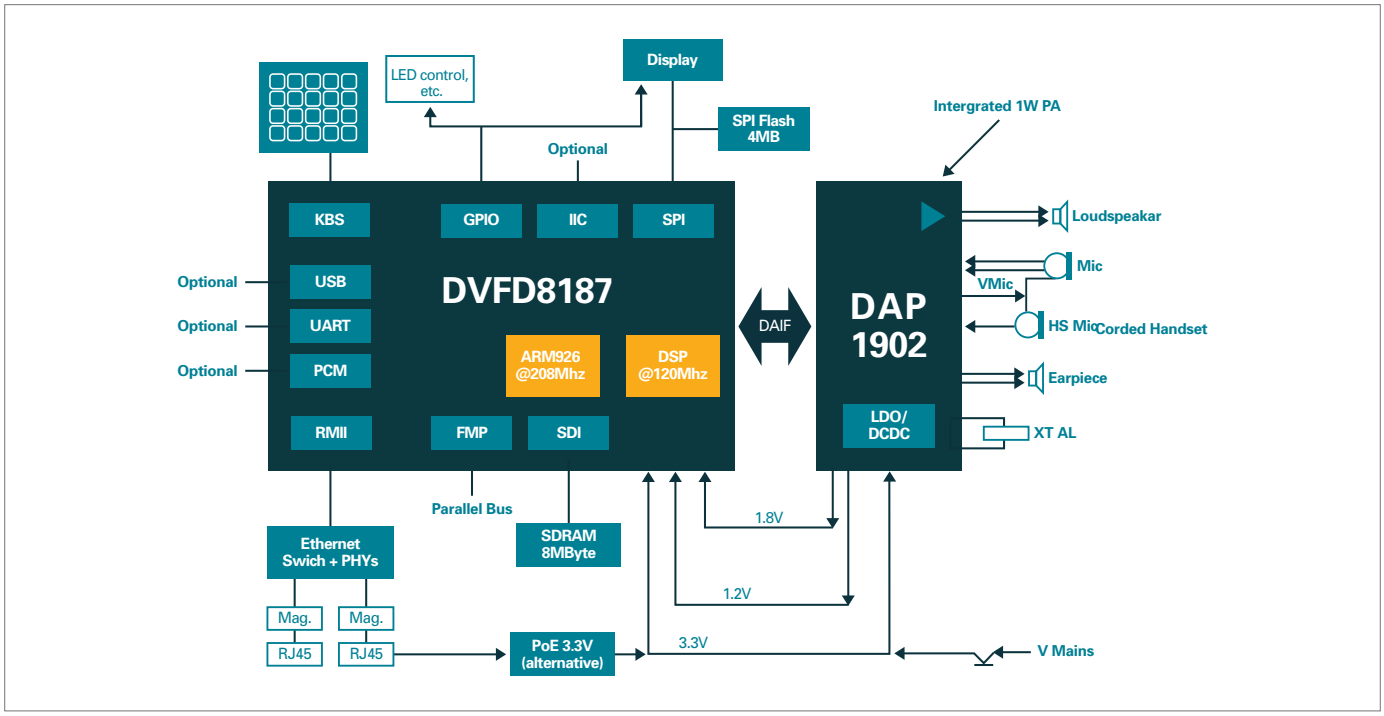

IP Phone Products

DSP Group's comprehensive VoIP telephony solutions for the office range from low-end IP phones based on the Company's Vega Firebird chipset family to high-end video IP phones based on its XpandR chipset.

IP Phone / FP Solutions		Complementary Handset / PP Solutions	
High End XpandR Family		Handset	
Mid-Range Vega Firebird / DMW74	Graphical LCD 	Stationary DECT Key Phone	
Low End Vega Firebird	Text LCD 	Headset	

DSP Group Solutions in Mass Production	
Corded IP Phone Multi-line HD Voice Acoustic Echo Canceller	
SOHO Multi-line Multi-headset HD Voice Acoustic Echo Canceller Fax Bluetooth	

DSP Group, Inc. (NASDAQ: DSPG) is a leading global provider of wireless chipset solutions for converged communications at home. Delivering system solutions that combine semiconductors and software with reference designs, DSP Group enables consumer electronics (CE) manufacturers to cost-effectively develop new revenue-generating applications with fast time to market. At the forefront of semiconductor innovation and operational excellence for over two decades, and with a growing share of the wireless home telephony market, DSP Group provides a broad portfolio of wireless chipsets integrating DECT, Wi-Fi, PSTN and VoIP technologies with state-of-the-art application processors. Enabling converged voice, audio, video and data connectivity across diverse consumer products – from cordless and VoIP phones to home gateways and connected multimedia screens – DSP Group proactively partners with CE manufacturers to shape the future of converged communications at home.

For more information, visit **www.dspg.com**

Copyright © 2010, DSP Group, Inc. All rights reserved. DSP Group, Inc. and DSP Group Logo are trademarks of DSP Group, Inc. Other third party trademarks are property of their respective owners. All product information, dates and figures are not warranted as accurate or complete, and may be revised based on further information without notice.

DSP GROUP
at home in your wireless world